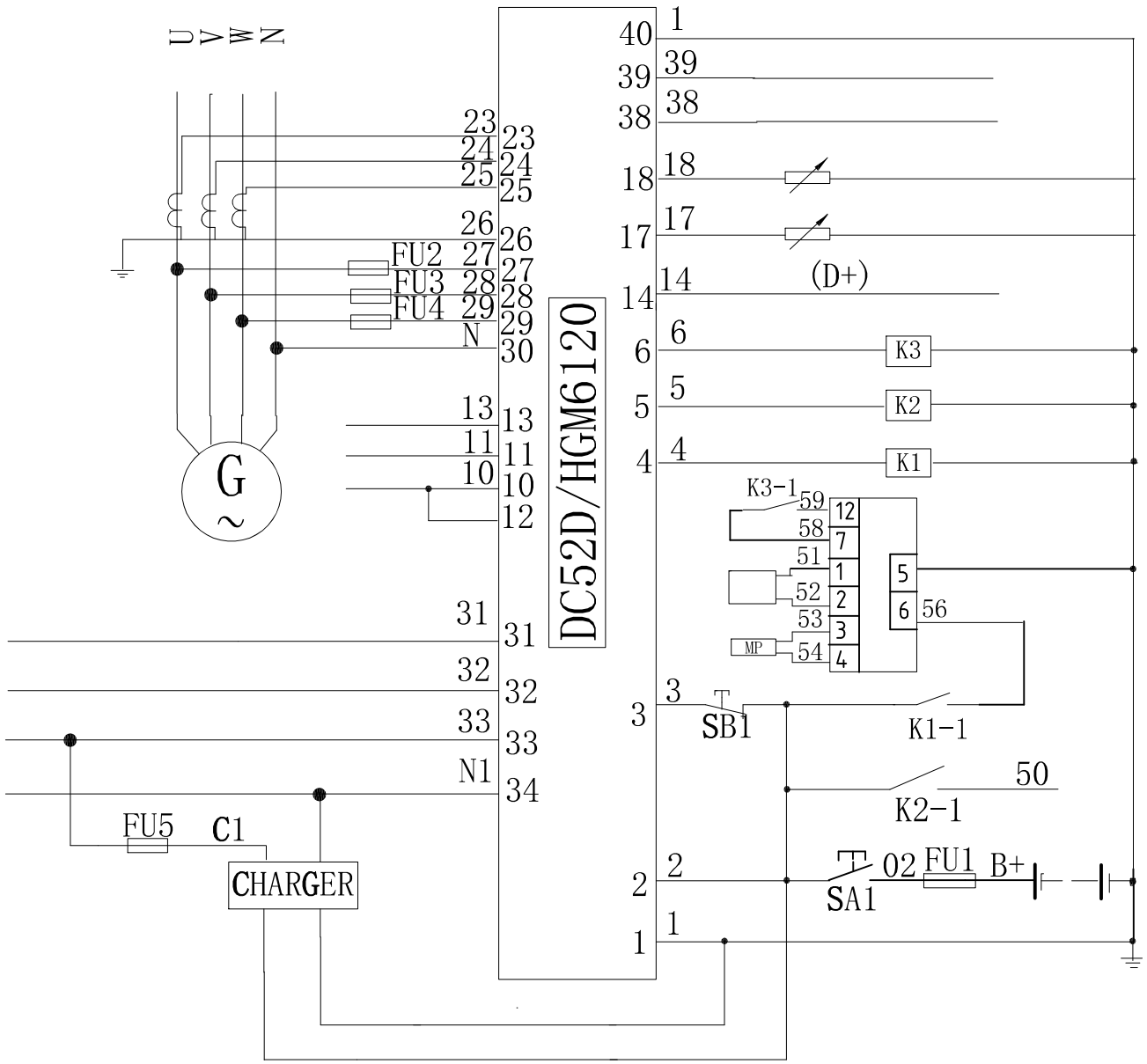

NO.	LABEL
1	1
2	02
3	14
4	50
5	17
6	18
7	23
8	24
9	25
10	26
11	U
12	V
13	W
14	N
15	31
16	32
17	33
18	N1
19	10
20	12
21	13
22	1
23	38
24	39

D+

MAXJONEL SRL
CUI: RO21803460; J28/418/2007
Str. Fratii Buzesti, 76A, Bals, judet Olt, 235100
Comenzi: 0741 499 499 - 0757 101 819;
Piese schimb: 0785 850 961
comenzi@maxjonel.ro; www.maxjonel.ro

1	SB1			
2	FU1		4	20A
3	FU2-5		1	10A
4	K1-K3		3	HH62P DC24V
5				
6				
7				

1:1

2 1